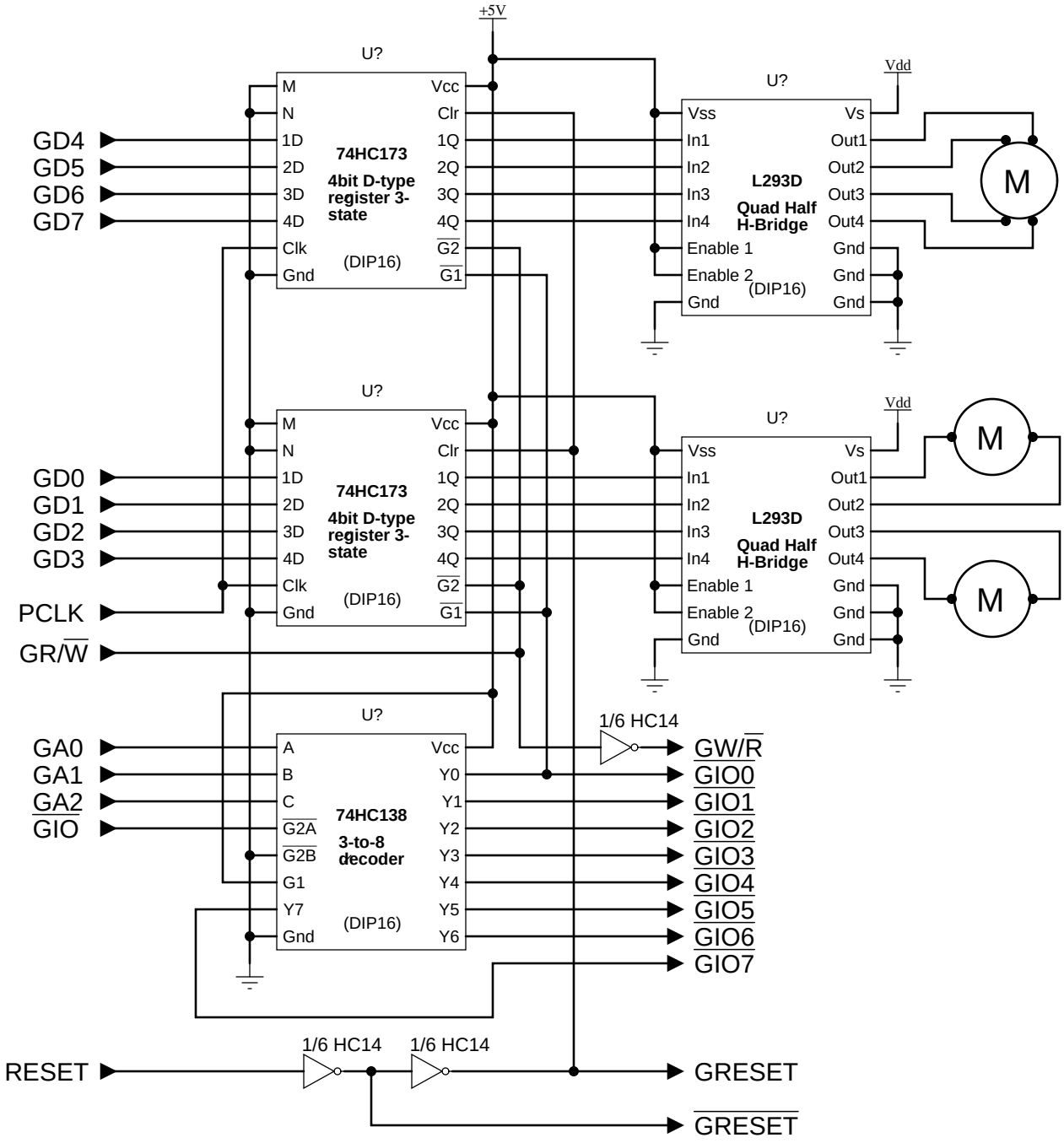

GIO Interface - Phase 3
Mac A. Cody 07/05/05